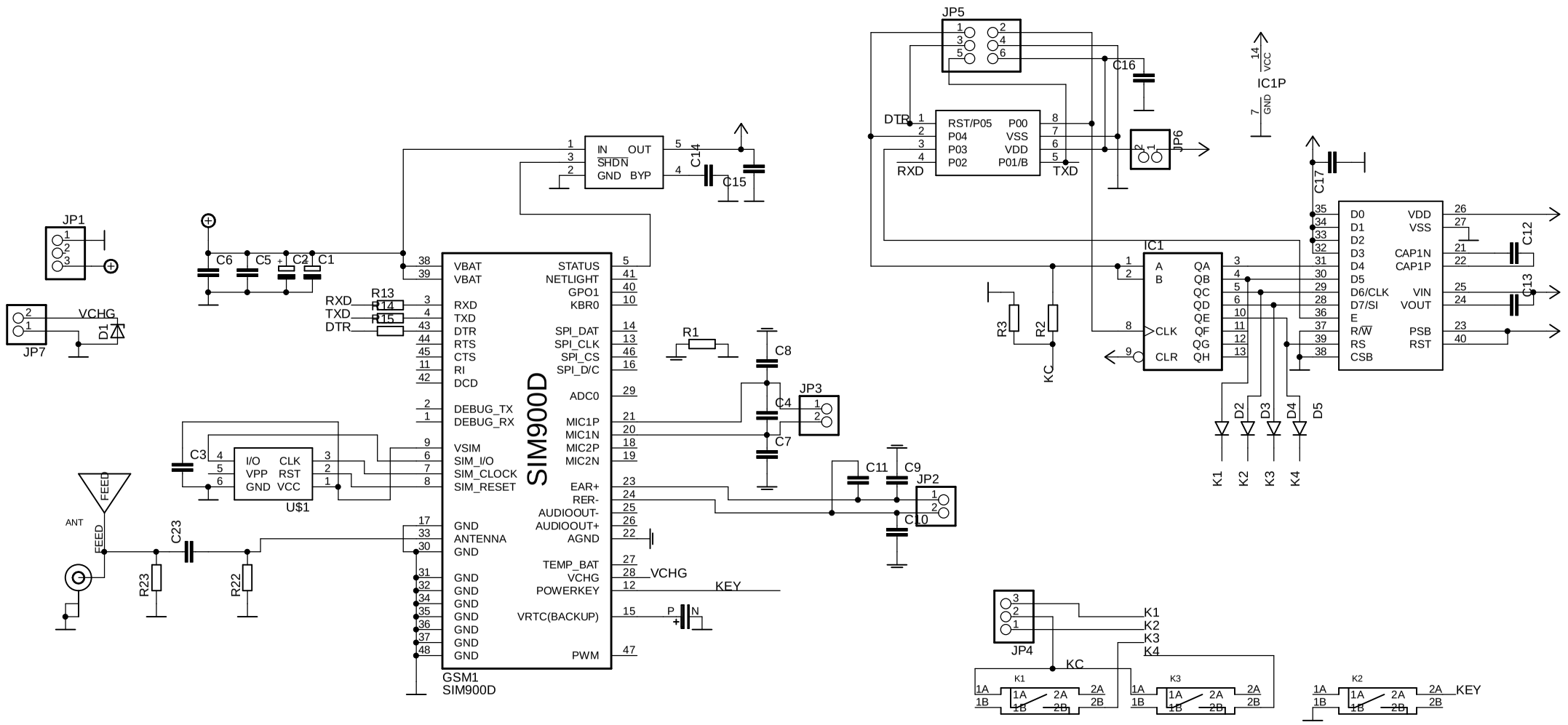
JP1
JP7
VCHG
D1
C6
C5
C2
C1
R13
R14
R15
RXD
TXD
DTR
IN
OUT
SHDN
GND
BYP
C14
C15
VBAT
VBAT
RXD
TXD
DTR
RTS
CTS
RI
DCD
DEBUG_TX
DEBUG_RX
VSIM
SIM_I/O
SIM_CLOCK
SIM_RESET
GND
ANTENNA
GND
GND
GND
GND
GND
GND
GND
GND
STATUS
NETLIGHT
GPO1
KBR0
SPI_DAT
SPI_CLK
SPI_CS
SPI_D/C
ADC0
MIC1P
MIC1N
MIC2P
MIC2N
EAR+
RER-
AUDIOOUT-
AUDIOOUT+
AGND
TEMP_BAT
VCHG
POWERKEY
VRTC(BACKUP)
PWM
SIM900D
GSM1
SIM900D
R1
C8
C4
C7
JP3
C11
C9
JP2
C10
C3
I/O
CLK
VPP
RST
GND
VCC
U$1
ANT
FEED
FEED
C23
R23
R22
VCHG
KEY
P
N
JP5
C16
DTR
RST/P05
P04
P03
P02
P00
VSS
VDD
P01/B
RXD
TXD
JP6
IC1P
VCC
GND
C17
IC1
A
B
CLK
CLR
QA
QB
QC
QD
QE
QF
QG
QH
R3
R2
KC
D0
D1
D2
D3
D4
D5
D6/CLK
D7/SI
E
R/W
RS
CSB
VDD
VSS
CAP1N
CAP1P
VIN
VOUT
PSB
RST
C12
C13
D2
D3
D4
D5
K1
K2
K3
K4
JP4
K1
K2
K3
K4
KC
1A
1B
2A
2B
KEY